US008102779B2

(12) **United States Patent**
Kim

(10) **Patent No.: US 8,102,779 B2**
(45) **Date of Patent: Jan. 24, 2012**

(54) **SYSTEM AND METHOD OF DETECTING AND LOCATING INTERMITTENT ELECTRICAL FAULTS IN ELECTRICAL SYSTEMS**

(75) Inventor: **Charles J. Kim**, Annandale, VA (US)

(73) Assignee: **Howard University**, Washington, DC (US)

(*) Notice: Subject to any disclaimer, the term of this patent is extended or adjusted under 35 U.S.C. 154(b) by 587 days.

(21) Appl. No.: **12/262,664**

(22) Filed: **Oct. 31, 2008**

(65) **Prior Publication Data**

US 2010/0110900 A1 May 6, 2010

(51) **Int. Cl.**
H04J 3/14 (2006.01)

(52) **U.S. Cl.** **370/242**; 370/248; 370/521

(58) **Field of Classification Search** 370/242, 370/248, 521

See application file for complete search history.

(56) **References Cited**

U.S. PATENT DOCUMENTS

4,868,826	A *	9/1989	Smith et al.	714/10
4,887,041	A	12/1989	Mashikian	
4,929,887	A	5/1990	Robitaille et al.	
5,029,274	A	7/1991	Goff	
5,237,511	A *	8/1993	Caird et al.	702/58
5,448,176	A	9/1995	Mashikian	
5,600,248	A	2/1997	Westrom	
5,729,144	A	3/1998	Cummins	
5,784,393	A	7/1998	Byers	
5,790,537	A	8/1998	Yoon et al.	
6,181,140	B1	1/2001	Vokey	
6,198,401	B1	3/2001	Newton et al.	
6,313,642	B1	11/2001	Brooks	
6,385,561	B1	5/2002	Soraghan	
6,477,475	B1 *	11/2002	Takaoka et al.	702/59
6,646,447	B2	11/2003	Cern	
6,725,176	B1	4/2004	Long et al.	
6,759,851	B2	7/2004	Hazelton	
6,842,011	B1	1/2005	Page	
6,856,936	B1	2/2005	Chen	
6,868,357	B2	3/2005	Furse	
6,927,579	B2	8/2005	Blades	
6,934,655	B2	8/2005	Jones	
6,965,303	B2	11/2005	Lollenkopf	
6,972,574	B2	12/2005	Allan	
7,319,574	B2	1/2008	Engel	
7,368,919	B2	5/2008	Gervais	
7,432,720	B1	10/2008	Quaife	
2003/0085715	A1	5/2003	Lubkeman et al.	
2003/0125893	A1	7/2003	Furse	
2004/0017203	A1	1/2004	Becker	
2005/0231326	A1	10/2005	Enrico	
2006/0061368	A1	3/2006	Furse	

(Continued)

OTHER PUBLICATIONS

International Search Report dated Dec. 14, 2010 relating to PCT/US2010/034228.

(Continued)

Primary Examiner — Phuc Tran

(74) *Attorney, Agent, or Firm* — Fitch, Even, Tabin & Flannery

(57) **ABSTRACT**

Signals are transmitted from at least one transmitter that is positioned in an electrical network. The signals that have been transmitted are received by the at least one single receiver at a single receiver positioned within the electrical network. At the single receiver, the received signals are analyzed and a determination from the analyzing the received signals is made as to whether a fault has occurred in the electrical network.

8 Claims, 7 Drawing Sheets

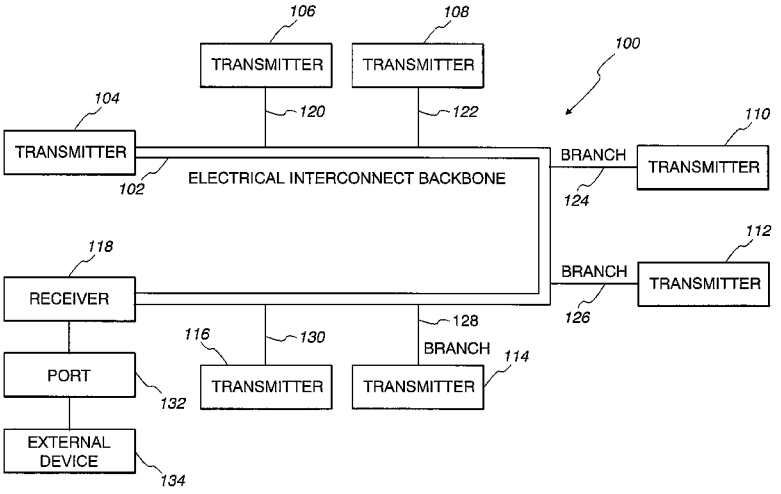

U.S. PATENT DOCUMENTS

2008/0273527	A1*	11/2008	Short et al.	370/364
2009/0228223	A1	9/2009	Liu et al.	
2010/0171630	A1	7/2010	Carralero et al.	

OTHER PUBLICATIONS

Sandia Report; Unlimited Release, Printed Sep. 2006 R. Kevin Howard, Steven F. Glover, Gary E. Pena, Matthew B. Higgins, Larry X Schneider and Thomas R. Lockner (38 pgs.).

IBEE Sensors Journal, vol. 5, No. 6, Dec. 2005; Feasibility of Spread Spectrum Sensors for Location of Arcs on Live Wires Cynthia Furse, Senior Member, IEEE, Paul Smith, Member, IEEE, Mehdi Safavi, and Chet Lo, Member, IEEE (6 pgs.).

International Search Report dated Dec. 22, 2009.

V.B. Prasad, "The Effects of Intermittent Faults in the Reliability of Digital Systems", IEEE Southeastern '90. Proceedings, vol. 3. pp. 948-952, Apr. 1990.

I. Hakki Cavdar, "Performance Analysis of FSK Power Line Communications Systems Over the Time-Varying Channels: Measurements and Modeling", IEEE Transactions on Power Delivery, vol. 19, issue 1, pp. 111-117, Jan. 2004.

Chun-Hung Liu, Eric Wade, and H. Harry Asada, "Reduced-Cable smart Motors Using DC Power Line Communication", IEEE International Conference on Robotics and Automation, Proceedings, vol. 4., pp. 3831-3838, 2001.

Paul Smith, Cynthia Furse, and Jacob Gunther, "Analysis of spread spectrum time domain Reflectometry for Wire Fault Location", IEEE Sensors Journal, vol. 5, No. 6, Dec. 2005.

Slenski, G.A., Walz, M.F., "Novel Technologies for Improving Wire System Integrity, "Ninth Aging Aircraft Conference, Atlanta, Mar. 6-9, 2006.

Charles Kim and Nicholas Johnson, "Detection of Intermittent Faults in Aircraft Electrical Wire by Utilizing Power Line Communication", 9th joint FAA/DOD/NASA Conference on Aging Aircraft, Mar. 7, 2006, Atlanta, GA.

V. Taylor, and M. Faulkner, "Line Monitoring and Fault Location using Spread Spectrum on Power Line Carrier", IEE Electronics Letters, vol. 143, issue 5, pp. 427-434, Sep. 1996.

"ST7537HS1"—Home Automation Modem, SGS—Thomson Microelectronics, 1995.

"Power Line Modem Application—Remote control using ST7537 and ST6:Application Note", SGS—Thomson Microelectronics, 1994.

"ST7537—Power Line Application Modem" Application Note, SGS—Thomson Microelectronics, 1995.

Charles Kim and Michael Carraleo, "Functionality Test of PLC Data Error Approach for Detecting Intermittent Faults," 11th joint FAA/DOD/NASA Conference on Aging Aircraft, Apr. 21-24, 2008.

* cited by examiner

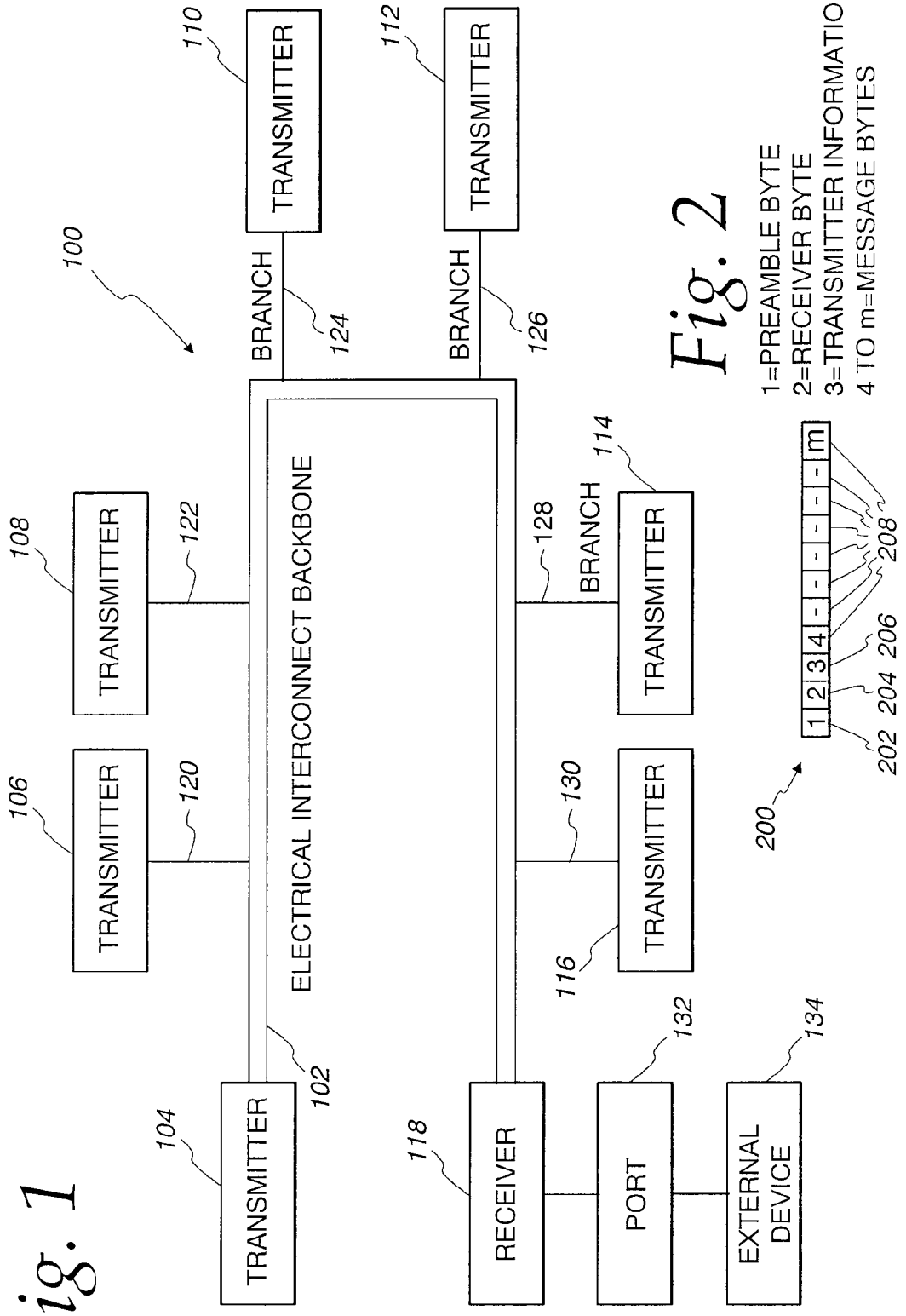
100
TRANSMITTER
104
ELECTRICAL INTERCONNECT BACKBONE
102
TRANSMITTER
106
120
TRANSMITTER
108
122
BRANCH
124
TRANSMITTER
110
BRANCH
126
TRANSMITTER
112
BRANCH
128
TRANSMITTER
114
TRANSMITTER
116
130
RECEIVER
118
PORT
132
EXTERNAL DEVICE
134

Fig. 1

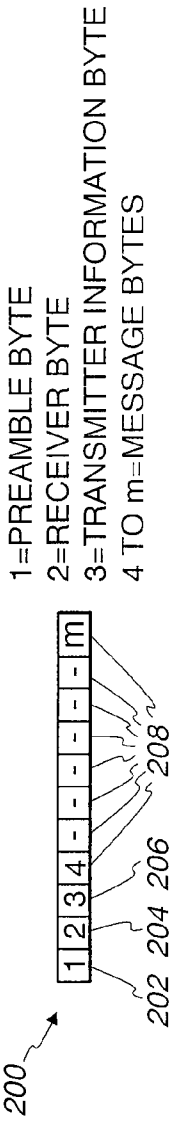
1=PREAMBLE BYTE
2=RECEIVER BYTE
3=TRANSMITTER INFORMATION BYTE
4 TO m=MESSAGE BYTES
1 2 3 4 - - - - m
200
202
204
206
208

Fig. 2

Fig. 3

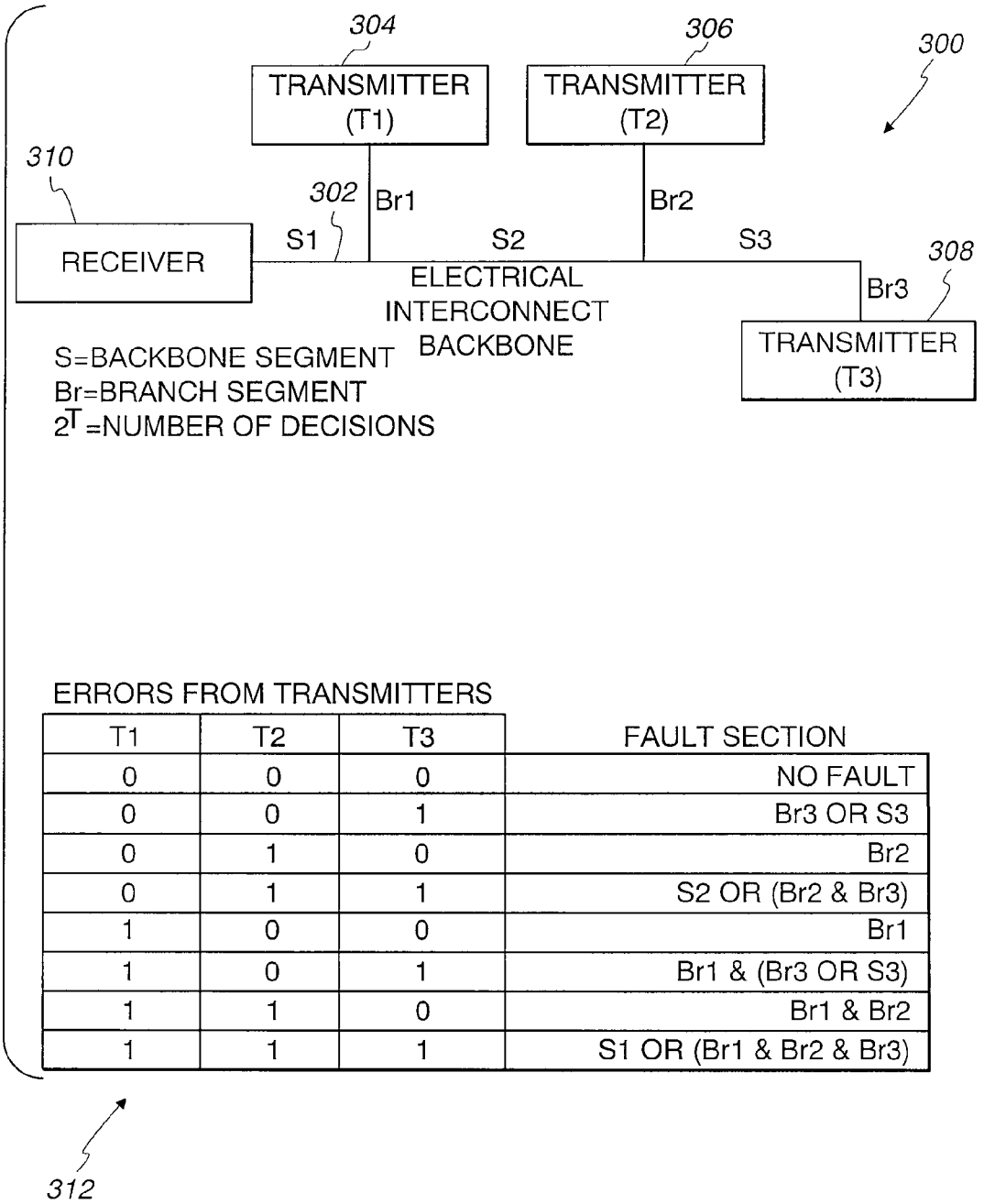

ERRORS FROM TRANSMITTERS

T1	T2	T3	FAULT SECTION
0	0	0	NO FAULT
0	0	1	Br3 OR S3
0	1	0	Br2
0	1	1	S2 OR (Br2 & Br3)
1	0	0	Br1
1	0	1	Br1 & (Br3 OR S3)
1	1	0	Br1 & Br2
1	1	1	S1 OR (Br1 & Br2 & Br3)

Fig. 4

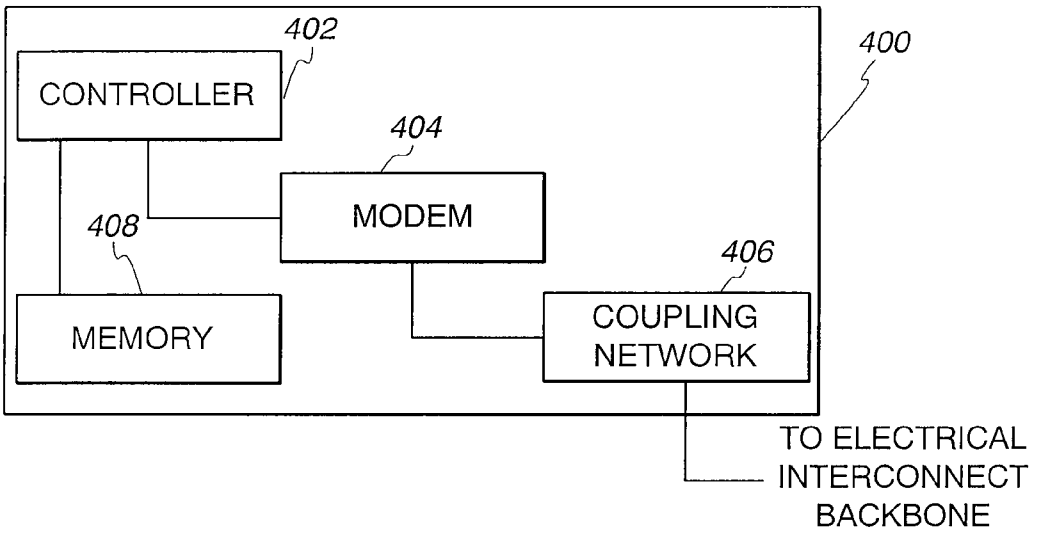

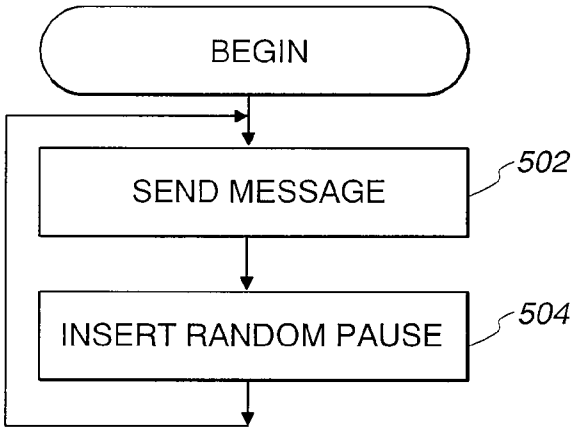

Fig. 5

Fig. 6

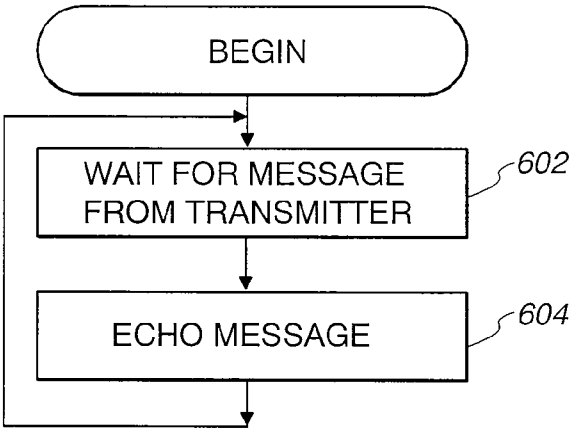

Fig. 7a

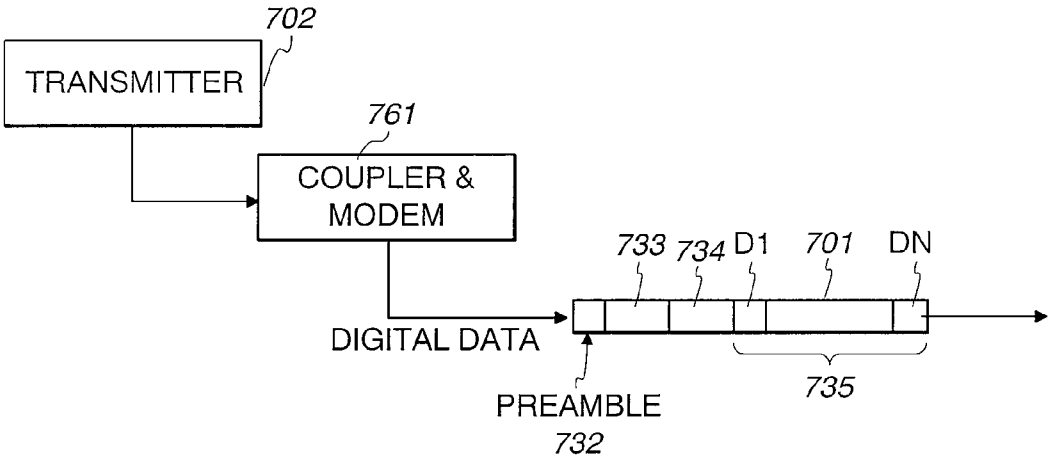
702
TRANSMITTER
761
COUPLER & MODEM
733
734
D1
701
DN
DIGITAL DATA
PREAMBLE
732
735

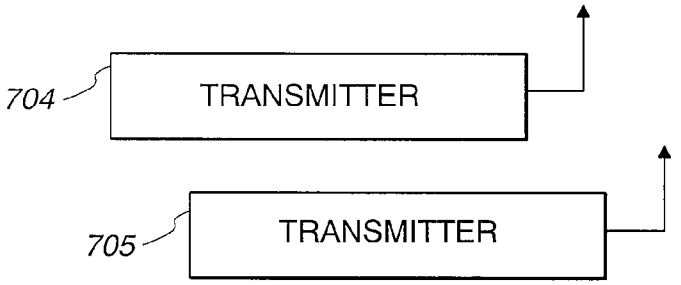
704
TRANSMITTER
705
TRANSMITTER

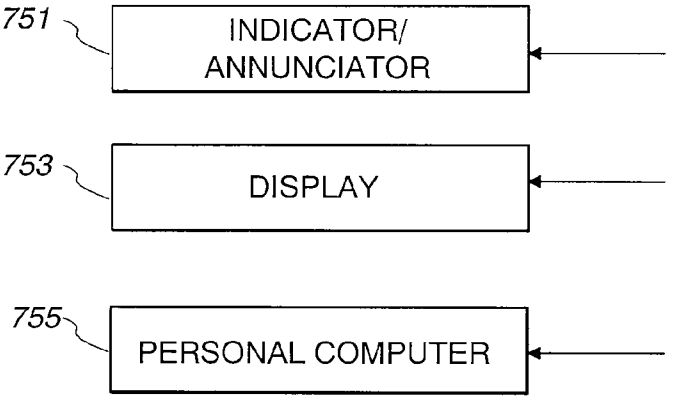
751
INDICATOR/ ANNUNCIATOR
753
DISPLAY
755
PERSONAL COMPUTER

Fig. 7

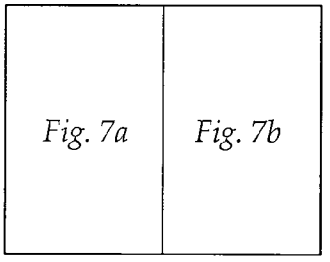
Fig. 7a
Fig. 7b

Fig. 7b

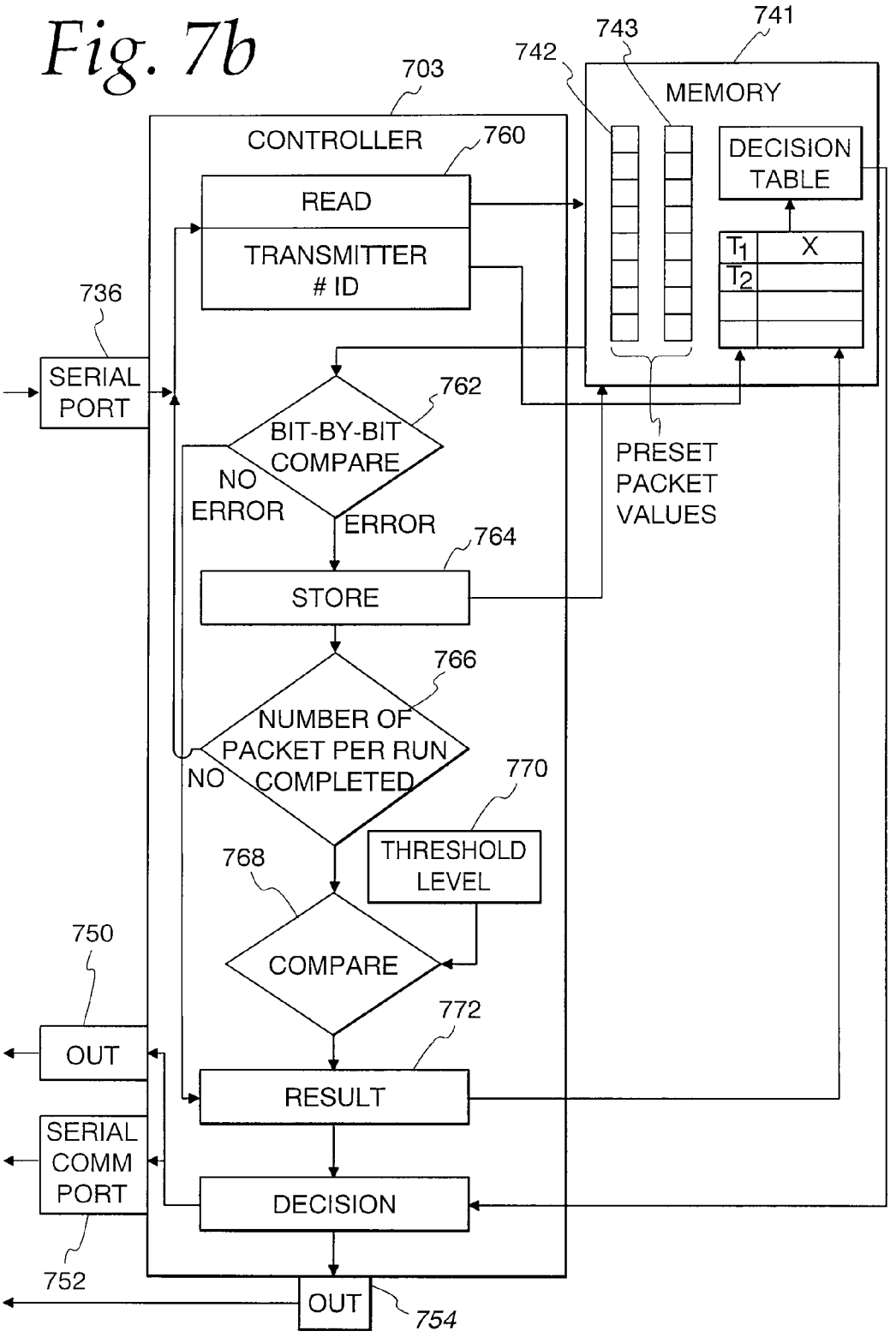
703
CONTROLLER
760
READ
TRANSMITTER # ID
736
SERIAL PORT
762
BIT-BY-BIT COMPARE
NO ERROR
ERROR
764
STORE
766
NUMBER OF PACKET PER RUN COMPLETED
NO
770
THRESHOLD LEVEL
768
COMPARE
750
OUT
772
RESULT
SERIAL COMM PORT
DECISION
752
OUT
754
742
743
741
MEMORY
DECISION TABLE
T1 X
T2
PRESET PACKET VALUES

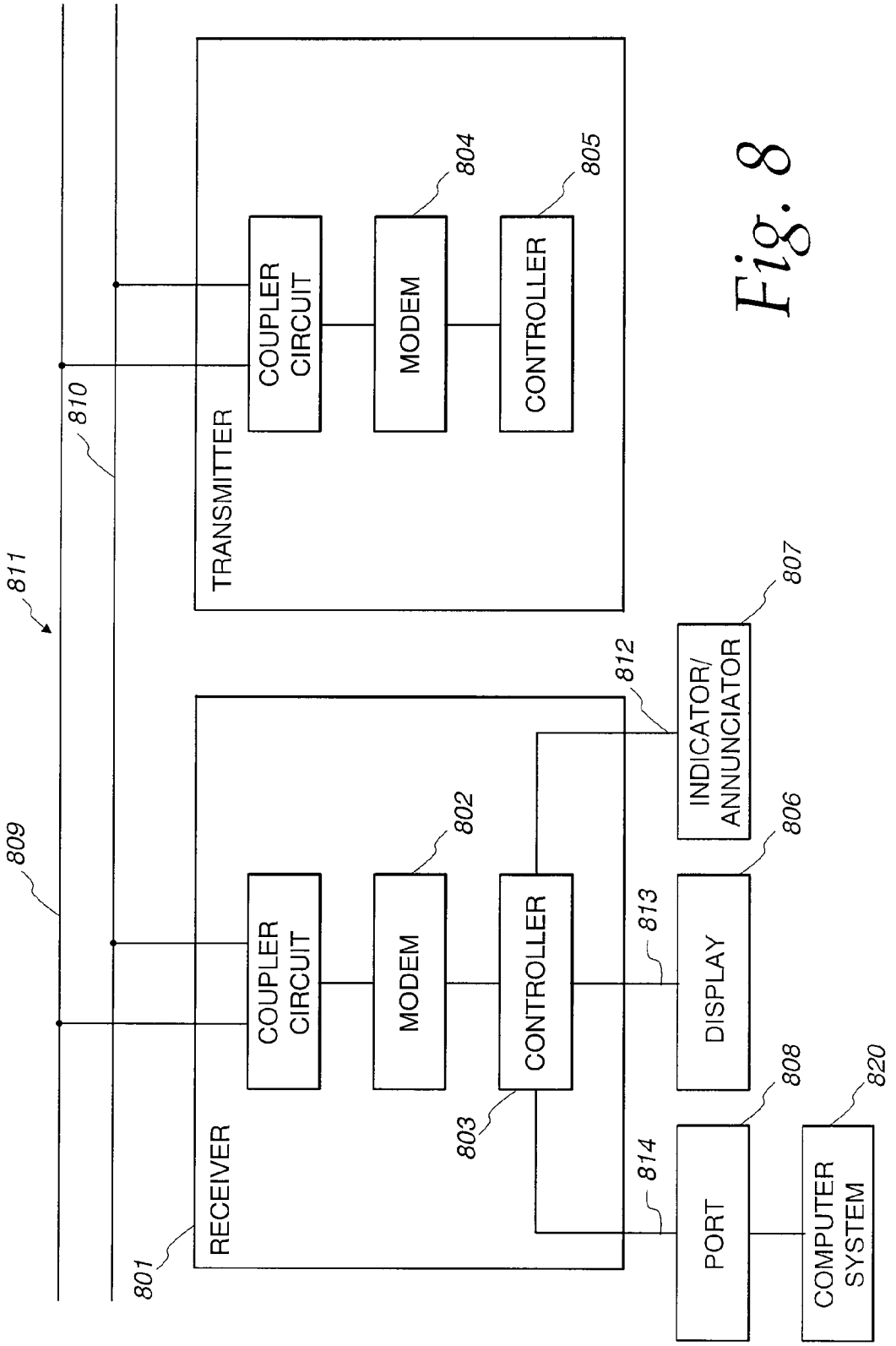
811
809
810
TRANSMITTER
COUPLER CIRCUIT
MODEM
CONTROLLER
804
805
RECEIVER
801
COUPLER CIRCUIT
MODEM
CONTROLLER
802
803
INDICATOR/ ANNUNCIATOR
807
812
DISPLAY
806
813
PORT
808
814
COMPUTER SYSTEM
820

Fig. 8

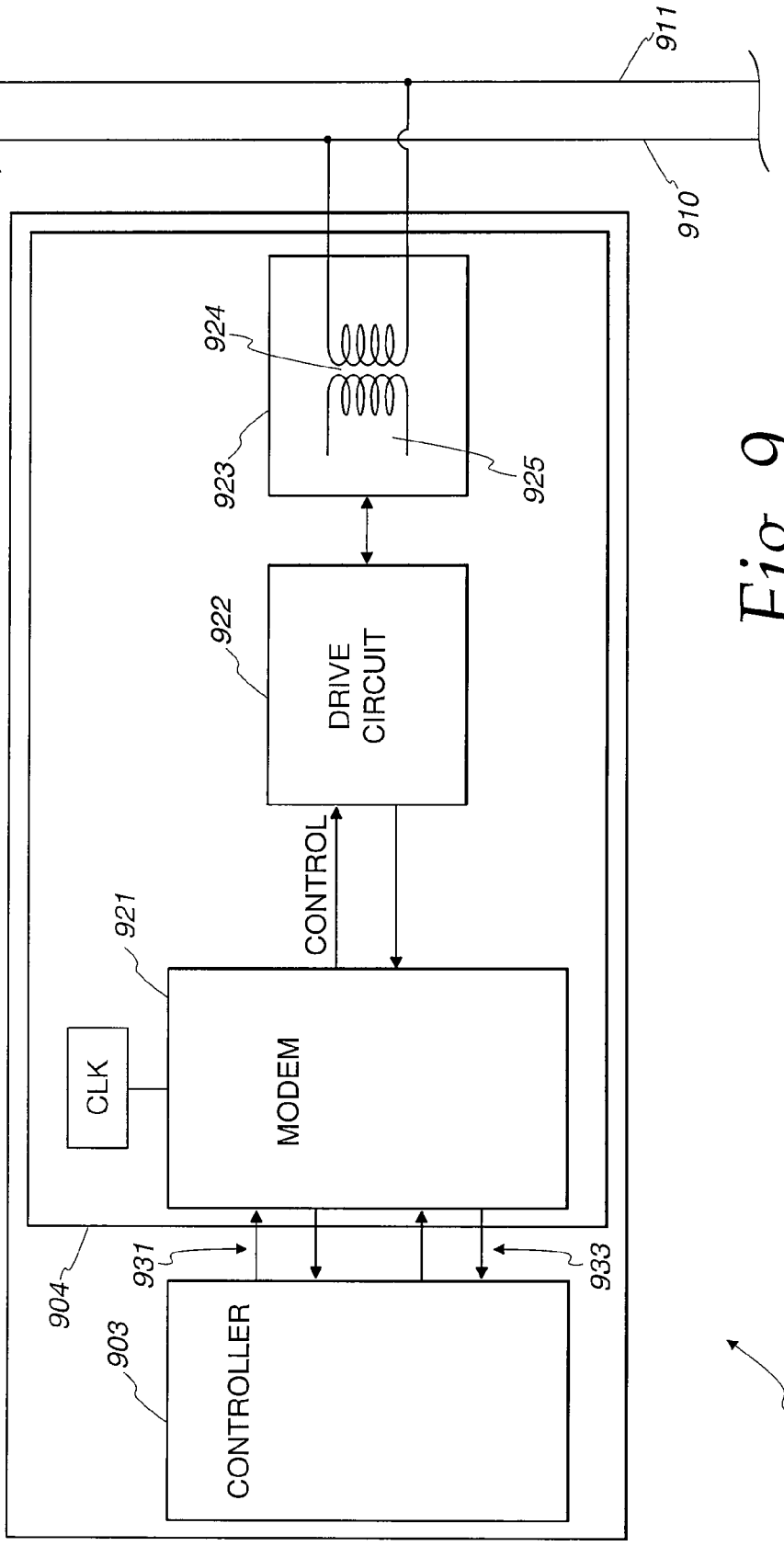
911
910
924
923
925
922
DRIVE CIRCUIT
CONTROL
921
CLK
MODEM
904
931
933
903
CONTROLLER
900

Fig. 9

SYSTEM AND METHOD OF DETECTING AND LOCATING INTERMITTENT ELECTRICAL FAULTS IN ELECTRICAL SYSTEMS

CROSS REFERENCES TO RELATED APPLICATIONS

Application entitled "Housing Arrangement for a Fault Determination Apparatus and Method of Installing the Same" naming Charles Kim as inventor and having Ser. No. 12/262,717 and being filed on the same day as the present application, and provisional application No. 60/846,718 entitled "Method of Detecting Intermittent Faults in Electrical Wire by Utilizing Data Communication Error Over Time," naming Charles Kim as inventor, filed Sep. 24, 2005, the contents of both of which are incorporated herein by reference in their entirety.

FIELD OF THE INVENTION

This application relates to approaches for detecting and/or locating electrical faults in electrical systems or networks.

BACKGROUND

Intermittent electrical faults are physical events that manifest themselves occasionally and in often unpredictable ways within electrical systems or networks. When an intermittent fault occurs in a system, the system may produce erroneous results or could fail. To take some specific examples of particular electrical faults that occur in networks, a wire may rub against a neighboring wire and a small electrical arc may be created as a result of the contact. In another example, a clamp may break through the insulation surrounding the wire and touch the wire creating a fault. In yet another example, a wire may break at the back end of a connector thereby creating a fault. In still another example, corrosion may create intermittent non-contact between wires and pins within a given system. In another example, cracks on wires within the system may have water dripping on them (or the wires may be in contact with other substances) thereby creating electrical faults. Internal coil turn-to-turn insulation in electric machines may also fail in systems with electrical coils creating electrical faults.

The consequences of intermittent electrical faults can be severe and, in many instances, can cause substantial damage to the electrical equipment, can result in injury to users, or can even cause the loss of human life. For instance electrical fires may be sparked because of the occurrence of some electrical faults. When the faults occur in aircraft, fuel tank explosions may occur if electrical faults occur near a fuel tank. Even if catastrophic damage or injury does not occur, the operational lifetime of machines or systems may be reduced as the result of the occurrence of intermittent electrical faults. One characteristic of intermittent faults is that they are random and unpredictable. Their recurrence is also unpredictable. However, if an intermittent fault is left undetected and un-repaired, a major, disastrous, and permanent fault might follow that may cause deaths, failures, or destruction.

Previous attempts at identifying electrical faults have relied upon the visual or instrument-aided inspection of electrical systems. However, various disadvantages exist with these previous approaches. For example, the operation of the system frequently had to be suspended to determine if a fault existed thereby causing various problems such as loss of revenue for the owner or operator of the system. Moreover, many locations within existing systems were frequently hard

to reach and/or observe thereby severely limiting the effectiveness of these approaches. These previous approaches also proved unable to detect the fault in many cases since the duration of the fault was often short and the system would behave normally as if nothing happened after this short-lived intermittent fault event. Therefore, it was relatively easy for the observer to miss the occurrence of the fault. Additionally, these approaches often relied upon intrusive placement of any equipment used frequently leading to at least some disruption of the existing system.

Other previous approaches relied upon transmitting electromagnetic waves across the network being observed. In one previous example, pulses were transmitted in networks and any reflections were analyzed to determine if a fault existed. More specifically, incident standing waves or impulses were transmitted and then reflected in the network, and then the time between the incident pulse and the reflected pulse was calculated to determine the distance to the location where the pulse was reflected. Different criteria were then used to determine if the reflection was a potential fault. One problem with this technique was that any change in the wire material (e.g., a branch-out in the network) reflected the incident waves resulting in erroneous fault determination. Another problem with this technique was that it required the transmission of high voltage pulses, which some electrical systems with thin coils (e.g., with short wires or thin windings) could not endure. Another time domain reflectometry method employed spread-spectrum techniques, but this approach did not solve the above-mentioned problems since high voltage pulse transmission was still required and reflection still occurred on branches of the electrical network.

Another previous approach transmitted direct-sequence spread-spectrum modulated signals, instead of high voltage signals, and employed signal processing techniques in an attempt to find and locate electrical faults. These approaches, however, still relied on reflectometry that is, sending incident signal and receiving reflected signal and the timing of them for distance calculation. As a result, although this approach may have, under some circumstances, overcome the need to use high voltage incident voltage pulses, it still had the problem of reflection occurring at all points of branching in the network and in the devices that were connected.

Still another problem of the reflectometry approach was that the location of the device must be close to one end of the electrical system, either the line end or the source end. Otherwise, the injected signal would be reflected from both ends and result in a combined, distorted, and reflected signal. This requirement of locating the device at either end is very difficult to meet since many electrical networks are connected in a complicated format, often in a mesh architecture.

BRIEF DESCRIPTION OF DRAWINGS

FIG. **1** comprises a block diagram of a fault determination system according to various embodiments of the present invention;

FIG. **2** comprises one example of a byte-map for use in a fault determination system according to various embodiments of the present invention;

FIG. **3** comprises a block diagram and fault determination table illustrating one approach for fault determination according to various embodiments of the present invention;

FIG. **4** comprises a block diagram of a fault determination apparatus according to various embodiments of the present invention;

FIG. **5** comprises a flow chart of one approach for determining faults according to various embodiments of the present invention;

FIG. **6** comprises a flow chart of one approach for determining faults according to various embodiments of the present invention;

FIG. **7** comprises a block diagram and flow chart of one approach for determining electrical faults according to various embodiments of the present invention;

FIG. **8** comprises a block diagram of a transmitter and receiver according to various embodiments of the present invention; and

FIG. **9** comprises a block diagram of a transmitter or a receiver according to various embodiments of the present invention.

Skilled artisans will appreciate that elements in the figures are illustrated for simplicity and clarity and have not necessarily been drawn to scale. For example, the dimensions and/or relative positioning of some of the elements in the figures may be exaggerated relative to other elements to help to improve understanding of various embodiments of the present invention. Also, common but well-understood elements that are useful or necessary in a commercially feasible embodiment are often not depicted in order to facilitate a less obstructed view of these various embodiments of the present invention. It will further be appreciated that certain actions and/or steps may be described or depicted in a particular order of occurrence while those skilled in the art will understand that such specificity with respect to sequence is not actually required. It will also be understood that the terms and expressions used herein have the ordinary meaning as is accorded to such terms and expressions with respect to their corresponding respective areas of inquiry and study except where specific meanings have otherwise been set forth herein.

DETAILED DESCRIPTION OF THE PREFERRED EMBODIMENTS

Approaches are provided to detect the presence and locations of faults within an electrical network. The approaches utilize one or more transmitters to send signals (e.g., packets) to one receiver and, based upon the mismatch between the signal sent and the signal received at the receiver due to the distortion in the signal transmission caused by the transient of intermittent fault, to determine the presence and/or location of electrical faults. The approaches described herein are easy and cost effective to use, do not rely upon the transmission of high voltage signals, can be installed at any location within the electrical network, are an effective detection solution for the unpredictable intermittent event of faults that occur between transmitter and receiver, and are not susceptible to the false fault indications obtained in previous approaches.

In many of these embodiments, signals are transmitted from a plurality of transmitters that are positioned in an electrical network. The signals transmitted by the transmitters are received at a single receiver positioned within the electrical network. At the single receiver, the received signals are analyzed and it is determined from the analysis of the received signals whether a fault has occurred in the electrical network between transmitters and receiver. The location of the fault may also be determined.

In some examples, a random pause duration is inserted between successively transmitted signals. Each of the plurality of transmitters has an associated unique combination of bits that uniquely identifies the transmitter and the unique combination bits is included in the signals sent to the receiver. The receiver analyzes the received combination of bits and compares the combination of bits to an expected combination of bits (expected to be received from the transmitter) and when there is not a match, determines that an electrical fault exists in the segment of the electrical network between the transmitter and the receiver. The location of the electrical fault may also be determined based upon the analysis.

In other examples, each of the plurality of transmitters receives a command signal from the single receiver. Each transmitter only transmits signals to the single receiver when the command signal has been received at the selected transmitter. The total absence of an expected message from a transmitter or the mismatching of any message received (compared to an expected value) of a message sent in response to the command signal indicates the existence of open circuit or potential faults.

Referring now to FIG. **1**, one example of an approach for determining and detecting electrical faults in an electrical network **100** is described. An electrical interconnect backbone **102** is coupled to transmitters **104**, **106**, **108**, **110**, **112**, **114** and **116** via electrical branches **120**, **122**, **124**, **126**, **128** and **130** respectively. The electrical interconnect backbone **102** is also connected to a receiver **118**. The electrical interconnect backbone **102** may be any type of electrical connection of any voltage level or any current type, e.g., direct or alternating. For instance, the backbone **102** may include two wires (e.g., one ground and the other a wire transmitting a DC current and voltage). Other examples of backbone arrangements and any number of electrical wires are possible to distribute electrical power. In one example, electrical sources having voltages of approximately 100 vRMS (or 28V DC) are distributed across the backbone **102** and the branches of the network **100**.

The transmitters **104**, **106**, **108**, **110**, **112**, **114** and **116** are any type of device capable of transmitting any type of modulated communication signal, over electrical circuit **102** without compromising the power delivering function of the electrical network **102**, that includes any type of information. For example, the transmitters **104**, **106**, **108**, **110**, **112**, **114** and **116** may include controllers to form packets or messages, modems to convert the messages to suitable signals through modulation (e.g., having the proper voltage levels) for transmission, and a coupling network to provide filtering and protective functions to connect any of the transmitters to the electrical interconnect backbone **102**. As mentioned, the transmitters **104**, **106**, **108**, **110**, **112**, **114** and **116** may operate and transmit packets or messages at any voltage level appropriate for the electrical interconnect backbone **102**.

The receiver **118** is any device capable of receiving modulated communication signals from any of the transmitters **104**, **106**, **108**, **110**, **112**, **114** and **116** via the electrical interconnect backbone **102**. As with the transmitters **104**, **106**, **108**, **110**, **112**, **114** and **116**, the receiver **118** may include a controller, a modem and a coupling network. As mentioned, the coupling network buffers the receiver or transmitter from the electrical interconnect backbone **102** by a filtering function so that the receiver or transmitter insulates it from the high voltages of the electrical network while effectively sending and receiving the modulated signal. The modem in the transmitter modulates the digital signal formed by the controller and the modulated signal travels through the coupling network into the electrical network. The modem in the receiver accepts the modulated signal via the coupling network sent from the transmitters, demodulates the signals into a digital byte format, and sends the digital data to its controller. The receiver controller processes the signals for data errors or mismatch to determine whether a fault has been

detected or the likelihood that a fault has been detected and/or the possible location of faults. Various error rates can be determined from the process.

The receiver **118** communicates with a port **132** and the port **132** is coupled to an external device **134**. The external device **134** may be a personal computer, display, enunciator or any other type of device that is capable of alerting a user that a fault has been detected somewhere in the network **100**. The location of faults and message error rate calculated for the location may also be displayed to give the severity (likelihood) or status of the fault progress. In an alternative approach, the external device **134** may provide some or all of the fault determination processing capabilities rather than the receiver **118** when the receiver **118** is limited to provide the mismatch or error occurrence only.

In one example of the operation of the system of FIG. **1**, the transmitters **104**, **106**, **108**, **110**, **112**, **114** and **116** transmit messages to the receiver **118**. The receiver **118** analyzes the messages that it receives and based upon the results of the analysis determines whether a fault exists, the likelihood that a fault exists, and/or the possible (or determined) location(s) of faults (e.g., within a particular branch **120**, **122**, **124**, **126** and **128** or **130** of the network **100**). It will be appreciated that although a single receiver is shown in the example of FIG. **1**, any number of receivers may be used in the network **100**. Additionally, any number of transmitters may be employed in the network **100**.

Once errors are detected and/or their locations determined remedial action can be taken. For example, a user can access the potential site of the error, determine if a problem exists, and, if a problem exists remedy the problem (e.g., replace a wire).

Referring now to FIG. **2**, one example of a message format for messages transmitted according to the approaches described herein is described. A message or packet **200** includes a preamble byte **202**, a receiver information byte **204**, a transmitter information byte **206**, and 4 to m message bytes **208** where m is an integer greater than 4. In one approach, each transmitter within the system (e.g., transmitters **106**, **108**, **110**, **112**, **114**, or **116** of FIG. **1**) has a uniquely identifiable message byte (e.g., some unique pattern of binary ones and zeros) that is known to the receiver and that uniquely identifies a transmitter (e.g., the receiver **118** of FIG. **1**). All information in the message or packet **200** is included in the data stream that is transmitted to the receiver.

To detect an error or fault, in one approach, the receiver compares the data received from the transmitter against preassigned data that it has stored regarding each transmitter. In the case of a mismatch between the received data and the expected data, a fault is potentially detected. The non-reception at the receiver of an expected message or packet expected to be sent from the transmitter may also indicate the existence of a fault in the form of open circuit in the network.

For transmissions across the network, various approaches may be used to ensure signal integrity (e.g., to ensure signals sent by multiple transmitters do not interfere with each other). In any approach used, the modem of each transmitter monitors the wire via a "carrier detect" approach that detects if there are any modulated signals on the wire, and waits to send its signal until there is no signal on the wire. Therefore, at any one moment, only one transmitter is allowed to send signals. In one approach, multiple transmitters send signals without the control of the receiver. To ensure signal integrity, a random pause duration is inserted after each signal transmission. Each transmitter has an equal chance to send a signal to the receiver and, therefore, each wire segment (e.g., each branch of the network) is monitored at the same priority with an equal chance of detecting errors compared with any other electrical branch.

In another approach that may be used to achieve signal arbitration, only a transmitter that is ordered by the receiver is allowed to send a signal. In other words, the receiver is the master of this single-master and multiple-slave protocol. The receiver sends a message or packet (e.g., a command) to a transmitter, for example, the message of FIG. **2**. After the transmitter receives the message or packet from the receiver, this message is copied and sent back to the receiver. The comparison of the received message at the receiver against the sent message determines if there is an error in the signal, which in turn indicates that a fault exists in the wire segment between the receiver and the commanded transmitter. In some approaches and as described elsewhere herein, an error is detected if no return message is detected by the receiver (e.g., within a predetermined amount of time), indicating possible disconnected, open circuit.

Referring now to FIG. **3**, one example of using these approaches to detect an error or fault in a network **300** is described. In this example, an electrical backbone **302** is coupled to transmitters **304**, **306** and **308** and a receiver **310**. The network **300** is divided into segments S**1**, S**2** and S**3** and branches Br**1**, Br**2** and Br**3**.

A table **312** is stored in a memory at the receiver and used to determine the possible location or locations of electrical faults within the network **300**. For example, using the techniques described herein, it is determined if a particular error exists in one of the branches associated with a particular transmitter. For example, the mismatch of expected data from the transmitter **304** versus expected data, while there is no mismatch from the transmitters **306** and **308**, may indicate that a fault exists in branch Br**1**.

To take a few examples and utilizing the table **312**, if no errors are determined for transmitters **304**, **306** and **308**, no fault exists in the network. In another example, if no errors are detected at transmitters **304** and **308**, but an error is detected at transmitter **306** then a fault may exist at segment S**2** and/or both branches Br**2** and Br**3**. It will be appreciated that the table **312** maybe any type of data structure and is also not limited to the format shown in FIG. **3**. Moreover, the examples shown in table **312** may vary depending upon the placement of the transmitters and the receiver and the exact configuration of the network or other circumstances.

Referring now to FIG. **4**, one example of a transmitter or receiver **400** is described. The device **400** can be configured to operate as either a transmitter or receiver and includes a controller **402**, a modem **404**, a coupling network **406**, and a memory **408**.

If used as a transmitter, the controller **402** may form messages (e.g., packets) to send to a receiver via the modem **404** and coupling network **406**. The modem **404** forms signals according to appropriate voltage levels or protocols and the coupling network **406** provides appropriate buffering and/or filtering capabilities that protect the modem **404** and controller **402** from electrical hazards (e.g., overvoltage conditions) present on the backbone and, at the same time, effectively inject the modulated signals into the backbone.

If used as a receiver, the coupling network **406** filters in only the modulated signal from the backbone and the modem **404** demodulates the signal into digital data and sends it to the controller **402**. As a receiver, the device **400** may store in the memory **408** a table as has been described above with respect to FIG. **3**. The controller **402** then may perform an analysis to determine the potential location or locations of faults within a particular network. Further, the controller **402** may be

coupled to a port, which communicates with external devices to indicate to a user the presence and potential locations of faults. Further, the controller **402**, modem **404**, and/or coupling network **406** may be coupled to an external power supply.

Referring now to FIG. **5**, one example of a transmission arbitration protocol is described. At step **502**, a message or packet is sent from a transmitter. For example, the message maybe in the format as indicated in FIG. **2**. At step **504**, after the message is sent, a random pause duration is inserted after the message. Then, the same message is sent again, and this process continues, and to take one example, the receiver compares the received message to the expected message and determines that a fault exists if there is a mismatch. When a mismatch exists, a potential fault may exist in the portion of the network associated with the transmitter that sent the message.

Referring now to FIG. **6**, another example of a transmission arbitration protocol is described. At step **602**, a transmitter waits to receive a message from a receiver. At step **604**, after receiving a message the transmitter echoes the same message back to the receiver. Then, it waits for another command from the receiver. In the meantime, if the receiver never receives an echoed message back (e.g., after waiting for a predetermined time period) or the message returned to the receiver is in error (as would be indicated by a comparison of the received message with the expected message), then a fault (including open circuit) is indicated to exist.

Referring now to FIG. **7**, another example of approaches for fault determination is described. As shown in FIG. **7**, through a coupling network and modem **761**, a packet **701** (having pre-set values) is sent from transmitters **702**, **704**, and **705** to a controller **703** of a receiver, and read through serial communication port **736** of the controller **703**.

The packet **701** includes, for example, preamble byte **732**, and a transmitter identification byte **733**, and a packet number byte **734**, followed by n data bytes **735**, D**1** through Dn. N may be any integer value. In one example, n=24 and, consequently, 24 bytes of data are used. The rate of the data transmission, or bit rate, can become any speed or any modulation scheme suitable for the modem. In the some examples, a 2400 bps power line modem is used that provides approximately 130 kHz of Frequency Shift Keying (FSK) modulation. However, other numbers of data bytes may be used along with other bit rates and other modulation schemes. In some examples, a longer packet with slower bit rate with a modulation scheme may have better chance of intermittent fault detection than a shorter packet with higher bit rate with another modulation scheme.

The controller **703** of the receiver, after detecting the preamble byte **732**, followed by identification byte **733**, then reads the rest of the bytes (step **760**) one at a time and store the packet into internal memory space **741**. In another part of the memory **741**, the packet **701** is stored as a packet **742** and is used for a comparison with an expected (and previously stored) packet **743**. The expected packet **743** includes the expected values of information for the packet **742**. The packet information stored in memory can be compared against each of the transmitters.

The controller **703** at step **762** reads the stored packets **742** and **743** and makes a bit-by-bit comparison of all n data bytes against the pre-set values of the n data bytes between the packets **742** and **743**. The first analysis is to decide which transmitter sent the packet and the subsequent analysis result for packet mismatch is stored and associated with the transmitter. If the two packets are the same, then the result of no error is registered for the transmitter. Then, with for example, the decision table of FIG. **3**, a fault detection and location decision is made and displayed **753** or uploaded to an upper level computer **755**. Then, the next packet sent from a transmitter is read at step **762**.

At step **764**, the error details (including the identity of the transmitter that sent the packet) may be stored. At step **766** it is determined if an adequate number of packets has been received in order to determine whether an alarm should be given a user. If the answer at step **766** is negative, control returns to step **760**. If the answer is affirmative, execution continues at step **768** where a comparison is made with a threshold **770**. If the number of erred packets exceeds the threshold, a result **772** is formed as a fault (e.g., "1") or no-fault (e.g., "0") result of a particular transmitter as in the table of FIG. **3**. The final decision on fault determination using the table (stored in memory) is made and communicated to one or more of a port **750** (for display on an enunciator **751**), a communication port **752** (for presentation on a display **753**) and/or port **754** (for display on a personal computer **755**). Depending upon the type of display, graphical images maybe formed to be displayed on some or all of the mentioned external devices.

As described herein, a pause may be inserted between transmitted packets. In one example, the pause between two consecutive packets, in a system using a microcontroller of 8-bits and 20 MHz speed, is about 100 milliseconds. The pause time is selected so as to be sufficient for processing to occur. For example, the pause duration may be selected to allow for the fault determination process to finish and also for error messages to be sent to external devices (e.g., the enunciator **751**, the display **753**, and/or the personal computer **755**). The pause duration can also include time to allow processing to occur for a given number of packets, for example, 1000 packets.

The threshold level of the rate of error that initiates the fault (e.g., "1") or no-fault (e.g., "0") can be any predetermined value or, alternatively, be determined after a run of the system under clean electrical wire status. Further, the threshold can be automatically determined using the error rate by comparing the error rates during actual/normal operating status and those of actual intermittent fault status. Before deploying the above-mentioned approaches, a test run may be executed in a staged intermittent fault condition that sets the threshold level for a fault or no-fault boundary, and thus increases the detection probability while at the same time decreasing false alarm and nuisance readings.

Various error rates can be determined. For example, a first error type that can be calculated is a Net Packet Error Rate (NPER), which is the percentage of packets that contained errors out of the total number of received packets. In the NPER case, the lost packets by the error in identification byte(s) are ignored.

Alternatively, a Total Packet Error Rate (TPER), can be calculated. This rate is the percentage of the number of packets received with error out of the total number packets sent.

In another example, a Net Byte Error Rate (NBER) can be calculated. The NBER is the percentage of the number of packets received with just 1 data byte error caused by 1 or 2 bit errors in the byte out of the received packets with no error. The NBER focuses, unlike NPER or TPER, on very short disruptions. Very short disruptions in time rooted from an intermittent fault may cause error in a bit or two in a byte data, not across the data bytes.

Yet another alternative error rate that can be determined is the Total Byte Error Rate (TBER), which is the percentage of the number of packets received with 1 data byte error caused by 1 or 2 bit errors in the byte out of the total number of

packets sent. The TBER ignores any disruptions which are long enough to cause errors in multiple data bytes. This rate does not include or consider long disruptions possibly caused by normal switching operations and, as such, could reduce the number of false alarms.

Referring now to FIG. **8**, a receiver **801** receives packets over electrical wires **810** and **811** that are transmitted by a transmitter **802**. If the electrical wire carries DC current, then one of the wires **810** or **811** can be a ground wire. In the example of FIG. **8**, both the receiver **801** and the transmitter **802** have the same functional structure and includes a power line modem **802** or **804** and a controller **803** or **805**. The receiver **801** includes additional interface outputs or ports **812**, **813** and **814**. The output **813** is connected to an indicator/enunciator **807** to send an alarm when an intermittent fault is detected. This may be in the form of blinking light (e.g., light emitting diode (LED))and/or audible indication. The port **813** is used to display the alarm condition on a display **806** (e.g., a liquid crystal display (LCD)) with texts and graphics. The output **814** is further used to send the alarm condition to a computer system **820** via serial communication port **808** for displaying on a computer screen or for further analysis of the alarm condition data. The errors and error rates discussed herein can be displayed according to any of the display approaches described herein.

The transmitter **802** includes the power line modem **804** and the controller **805**. The controller **805** is a microcontroller or microprocessor which includes computing code, controls digital logic, and sends bytes of digital data (e.g., packets). The computing code manages the number of packets sent and how often the packets are sent.

Referring now to FIG. **9**, one example of a transmitter **900** is described. A power line modem **921** in the transmitter **900** receives the serially transmitted digital data stream from a controller **903**, converts the digital data to analog data, and modulates the analog data in FSK (Frequency Shift Keying) scheme (in which digital logic 1 is coded to analog signal of a certain frequency and digital logic 0 is to another frequency). The modulated signal is amplified by an amplifier **922** and sent through a coupler **923**, which sends the modulated signals and blocks all other signals outside the frequency band, to the electrical wires **910** and **911**.

The modern **921** may be any commercially available modem chip. The modem **921** may include a filter that band passes only the frequency band used in the particular FSK scheme that is employed. The modem **921** has four control and data communication lines with the controller **903**. These include RX control **930** for controlling the reception of digital data, TX control **931** for controlling the transmission of digital data, carrier detect (CD) control **932** for indicating to the controller **903** if and when the modem **922** receives a modulated signal from an electrical wire, and RX/TX control **933** for indicating if a digital signal has been received and is to be transmitted.

A modulated signal automatically is transmitted from the modem **921** and amplified by the amplifier circuit **922**. The amplified modulated signal then is presented to the electrical wires via a coupler **923**, which passes the signals of the frequency band and blocks all other signals. The coupler **923**, in one example, is a transformer coil **924** with filtering capacitors **925** and **926**. In one approach, the structure of the receiver is identical (or nearly identical with the receiver having ports to communicate with external devices) with the structure of the transmitter **900**.

Various transmission protocols may be used. For example, a byte of any data can be sent from the receiver to indicate to the transmitter to send data.

A packet may be sent to the receiver with various bytes of data. For example, a preamble byte may be included. The next byte is sent to identify the transmitter and the receiver. To take one example, if the identification byte is a preset data value such as a byte data of 10110011, then the receiver checks if the received identification byte is 10110011. If the received identification byte is the same as the preset data, then the receiver is now ready to receive the data stream that follows. One or more bytes can be used for identification purposes.

As mentioned, in one example, the group of data bytes including the preamble, identification, and actual data form a packet. In one approach, one packet is transmitted from a transmitter and reception of the same one packet made by a receiver. In one approach, the transmitter transmits the same one packet repeatedly, with a pause between two packets, until, for example, a set number of packets are sent (e.g., 956 packets). Then, packet transmission resumes. Under an intermittent fault condition, the preamble byte may be noised out, or the identification byte may be contaminated, then the receiver ignores the packet with the contaminated identification byte since the packet is interpreted as not meant to be sent to the receiver. In this case, one packet is lost and a packet error exists.

Thus, approaches are provided to detect the presence and locations of faults within an existing electrical network. The approaches utilize one or more transmitters to send signals (e.g., packets) to one more receivers and based upon the signal received at the receiver, to determine the presence and location of electrical faults. The approaches described herein are easy and cost effective to use, do not rely upon the transmission of high voltage signals, can be implemented at any place within the electrical system, and are not susceptible to false results as have been obtained in previous approaches.

While the invention herein disclosed has been described by means of specific embodiments and applications thereof, numerous modifications and variations could be made thereto by those skilled in the art without departing from the scope of the invention.

What is claimed is:

1. A method of determining intermittent electrical faults comprising:

transmitting signals from a plurality of transmitters that are positioned in an electrical network;

receiving the signals transmitted by each of the plurality of transmitters at a single receiver positioned within the electrical network;

at the single receiver, analyzing the received signals and determining from the analyzing of the received signals whether a fault has occurred in the electrical network;

wherein transmitting the signals comprises inserting a random pause duration between successively transmitted signals.

2. The method of claim **1** wherein each of the plurality of transmitters has an associated unique combination of bits that uniquely identifies the transmitter and wherein the unique combination bits is included in the signals sent to the receiver.

3. The method of claim **2** wherein the receiver analyzes the received combination of bits and compares the combination of bits to an expected combination of bits and when there is not a match, determines that an electrical fault exist.

4. The method of claim **3** further comprising determining the location of the electrical fault based upon the analyzing.

5. A fault determination system comprising:

a plurality of transmitters, each of the plurality of transmitters configured to transmit signals across at least a portion of an electrical network;

a single receiver communicatively coupled to the plurality of transmitters, the single receiver configured to receive the signals transmitted by each of the plurality of transmitters and to analyze the received signals and determine from analyzing the received signals when a fault has occurred in the electrical network;

wherein the each of the plurality of transmitters is configured to insert a random pause duration between successively transmitted signals.

6. The system of claim **5** wherein each of the plurality of transmitters has a unique combination of bits that identifies each transmitter and the unique combination of bits is included in signals sent to the single receiver.

7. The system of claim **6** wherein the single receiver is configured to analyze the received bits and to perform a comparison between the received bits to expected bits and when a match does not exist between the received bits and the expected bits, to determine that a fault exist.

8. The system of claim **7** wherein the single receiver is configured to determine the location of the fault based upon the comparison between the received bits and the expected bits.

* * * * *